KRAGSTA

Design and Quality
IKEA of Sweden

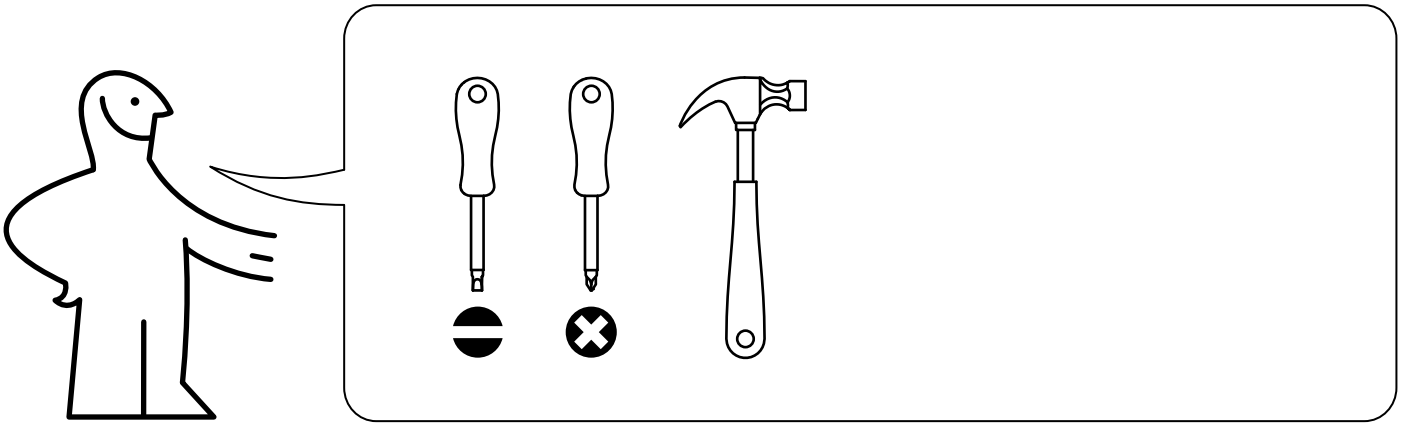

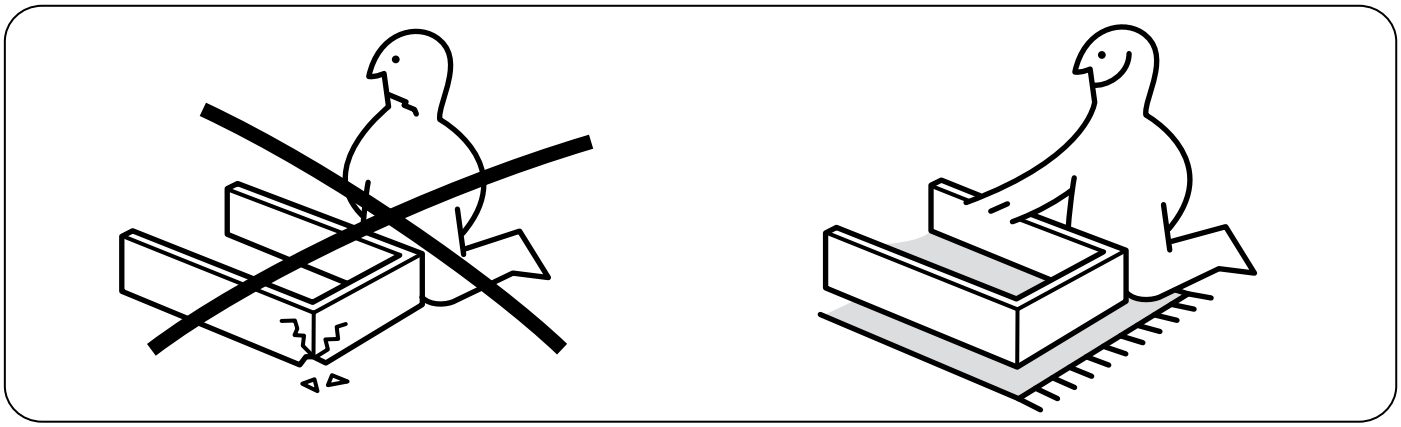

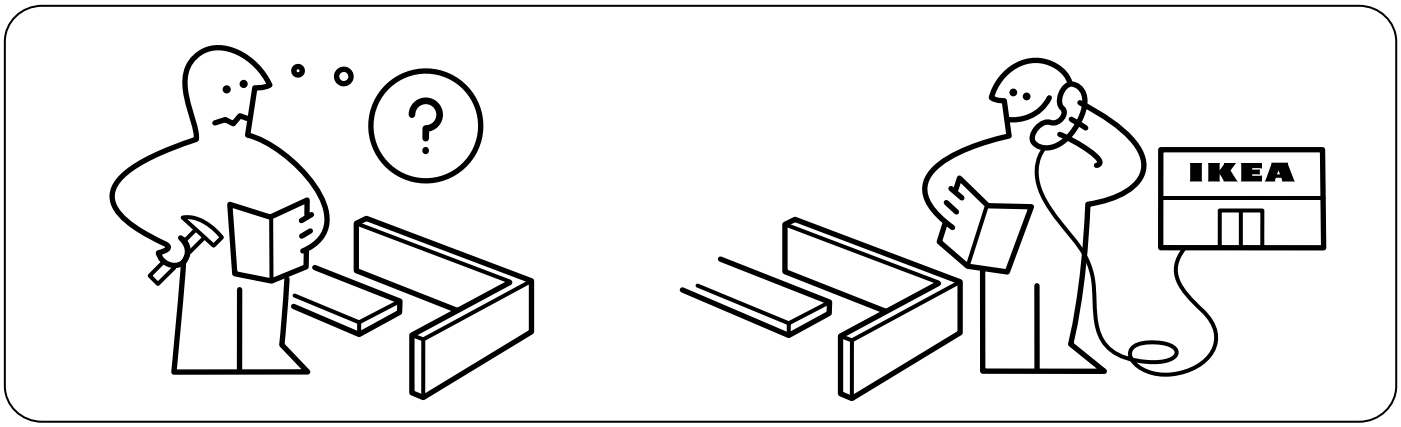

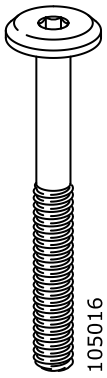

16x

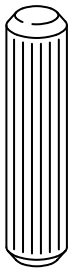

8x

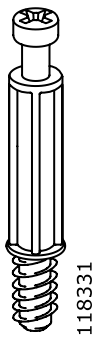

8x

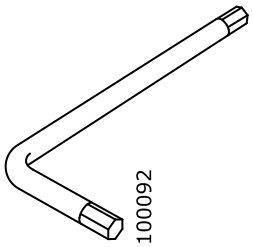

1x

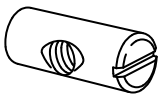

8x

8x

2x

8x

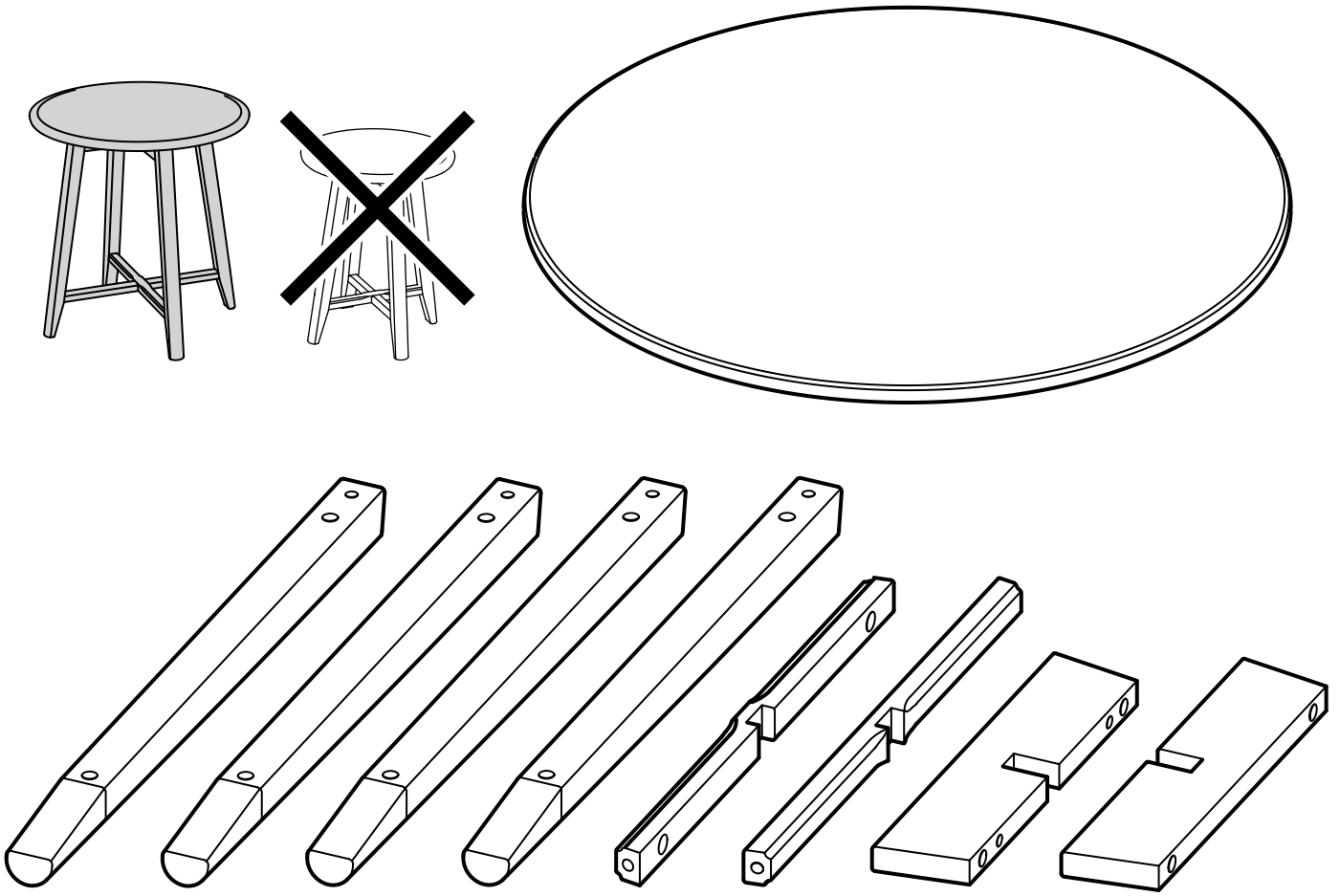

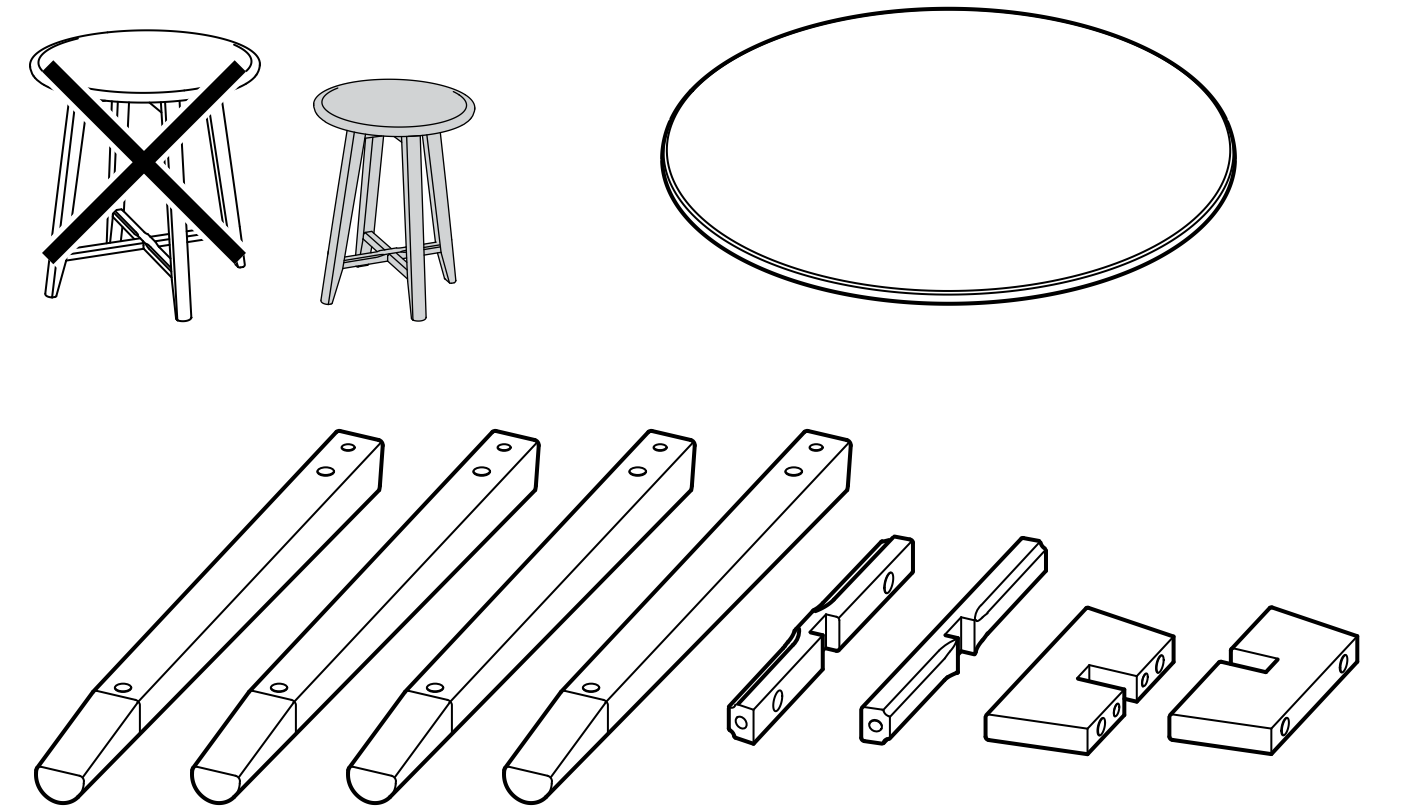

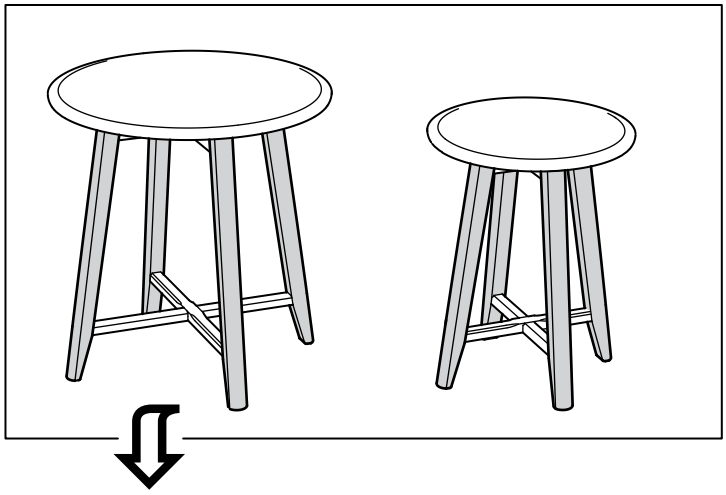

1

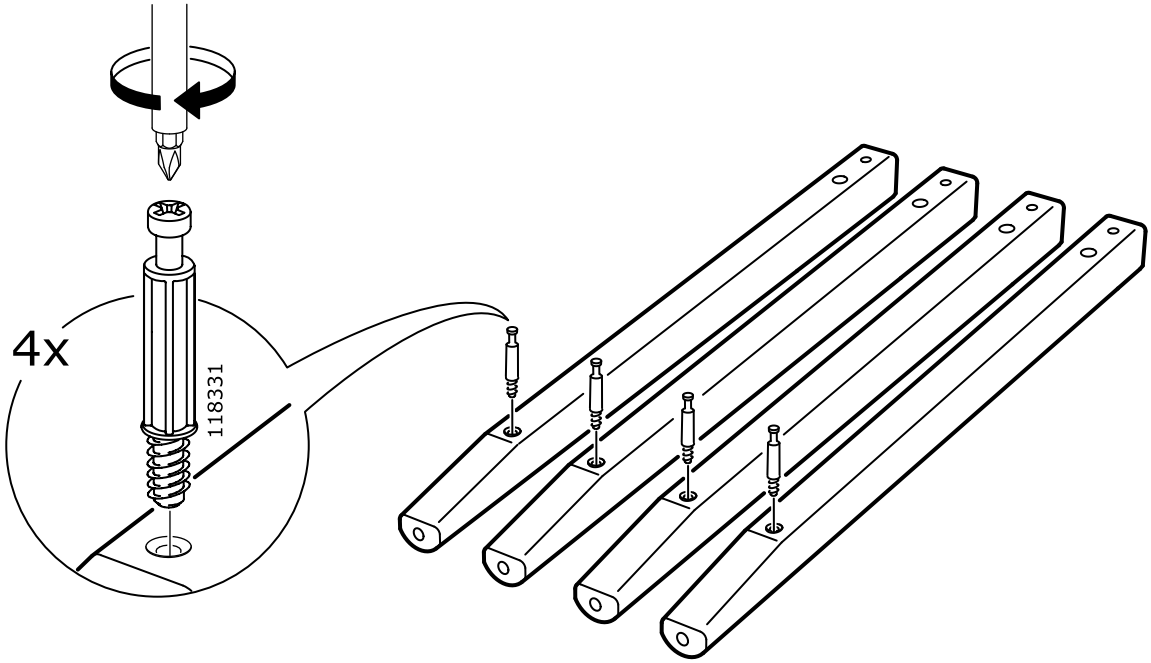

2

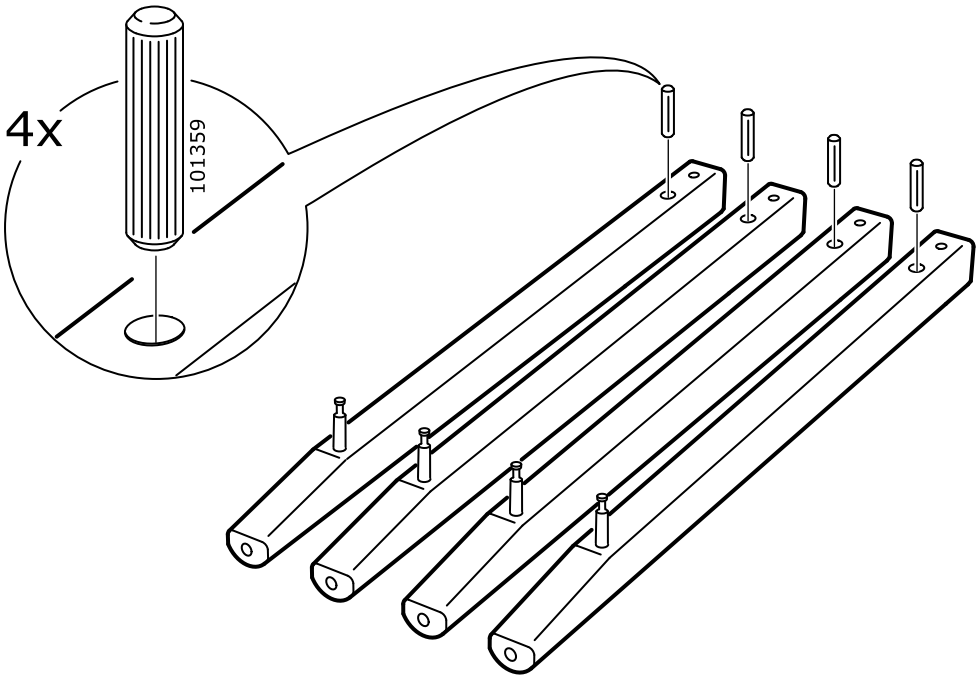

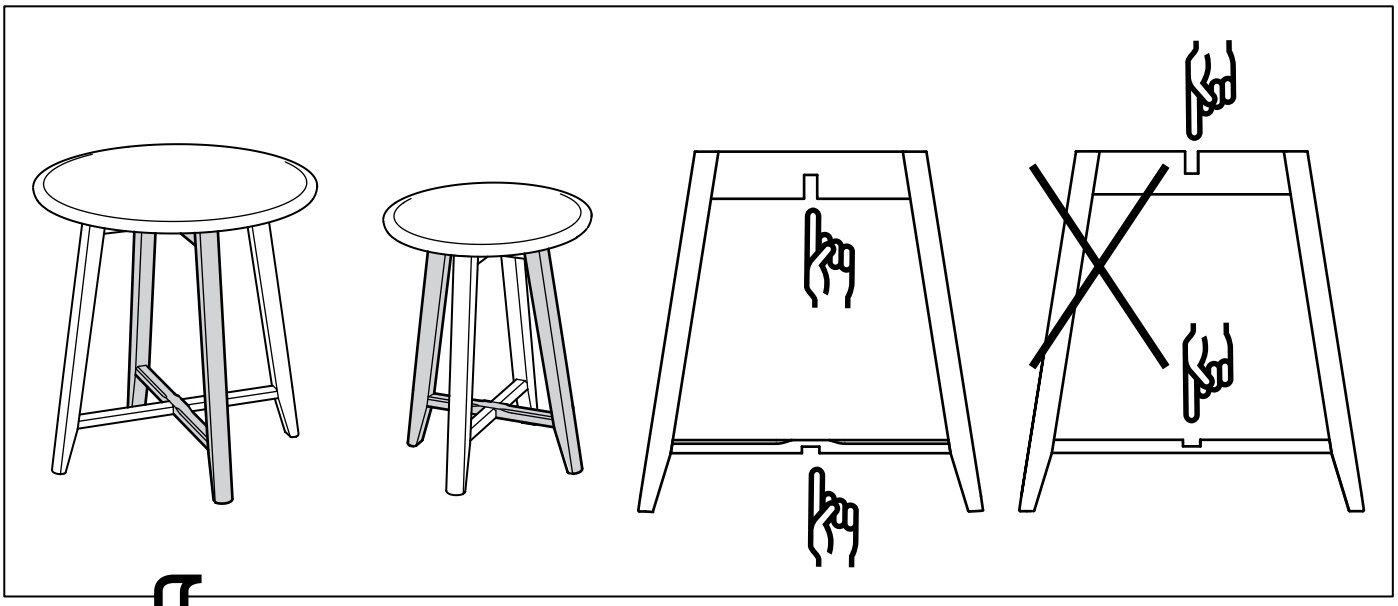

3

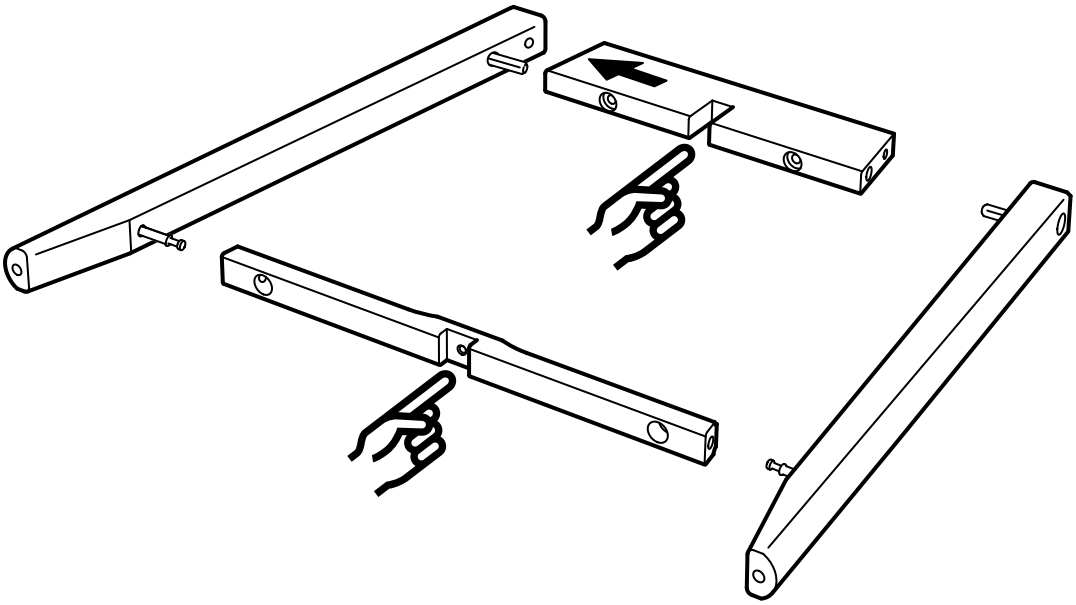

4

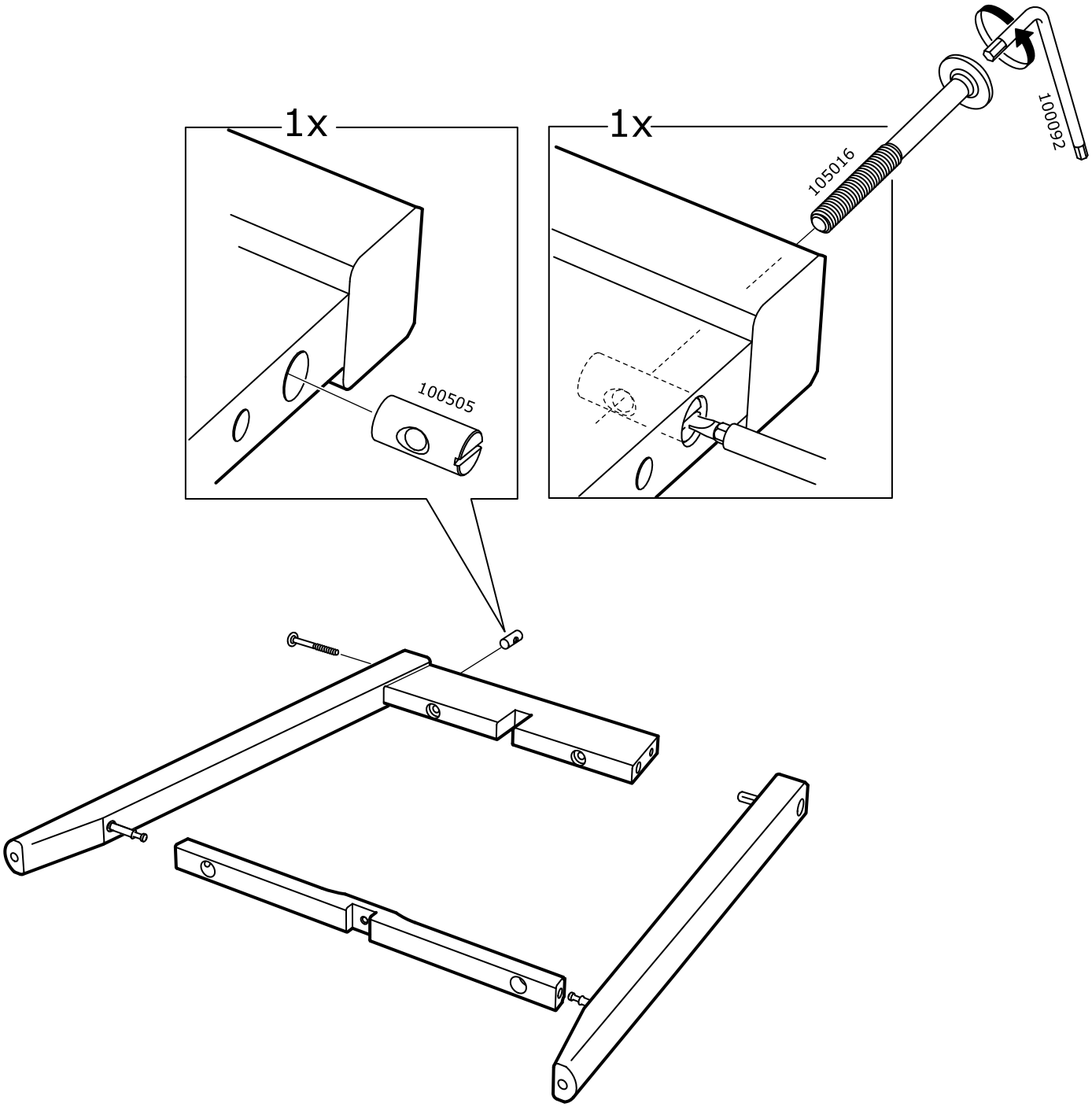

5

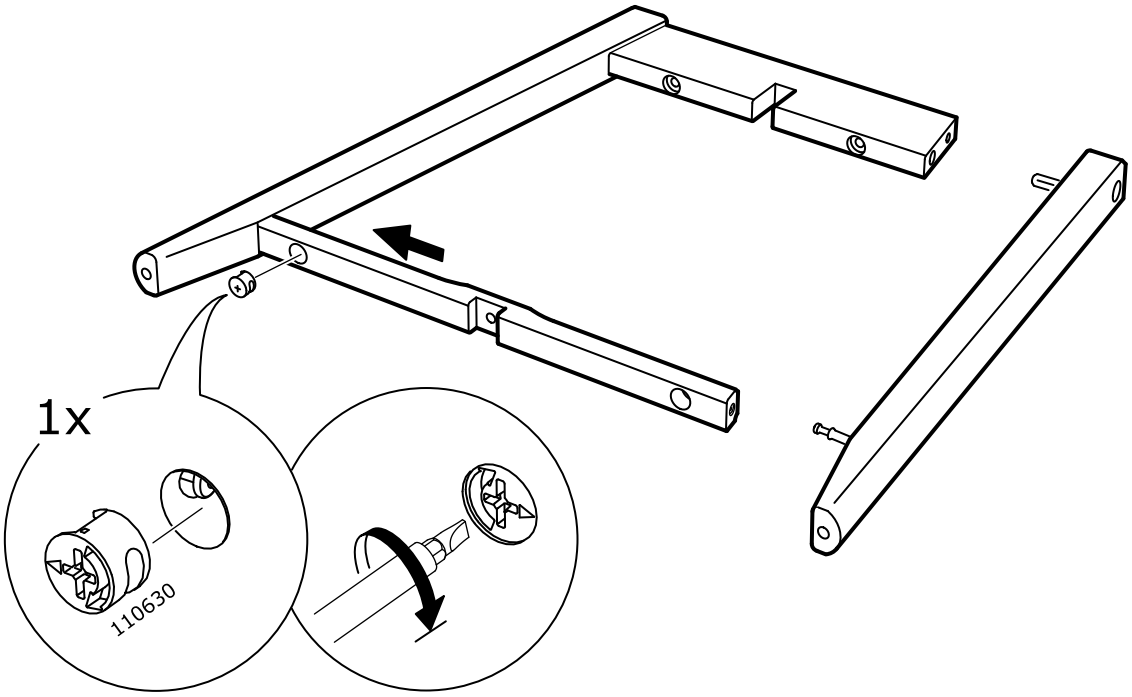

6

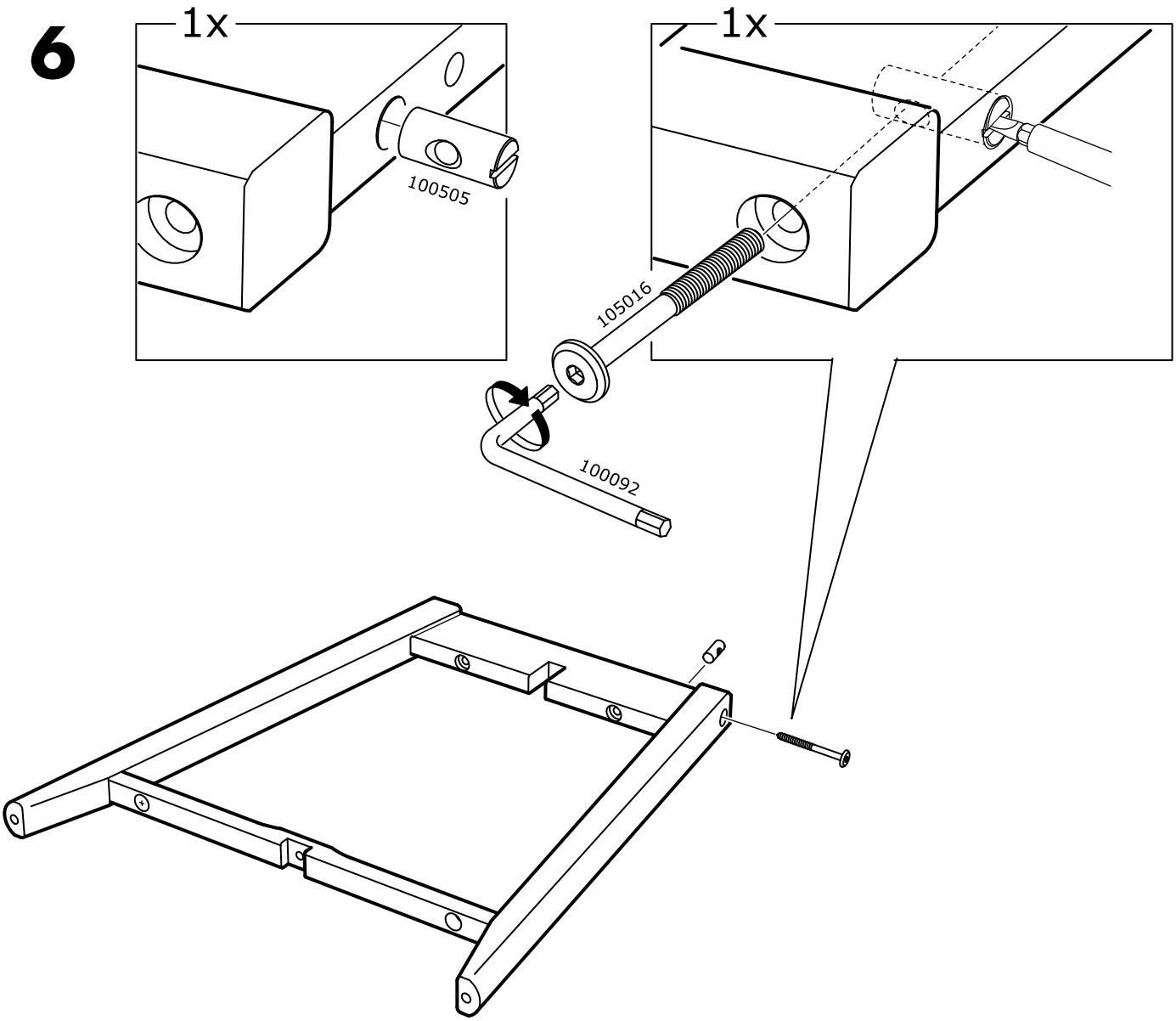

7

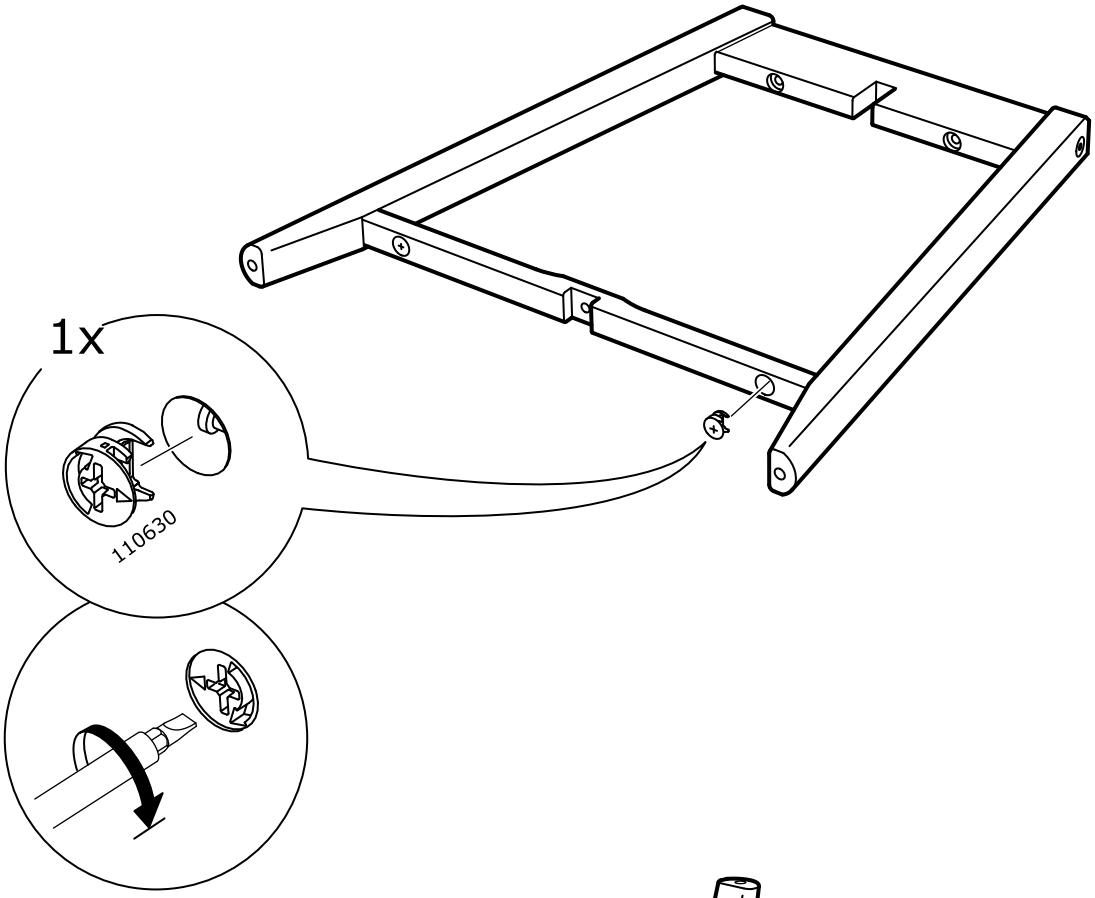

8

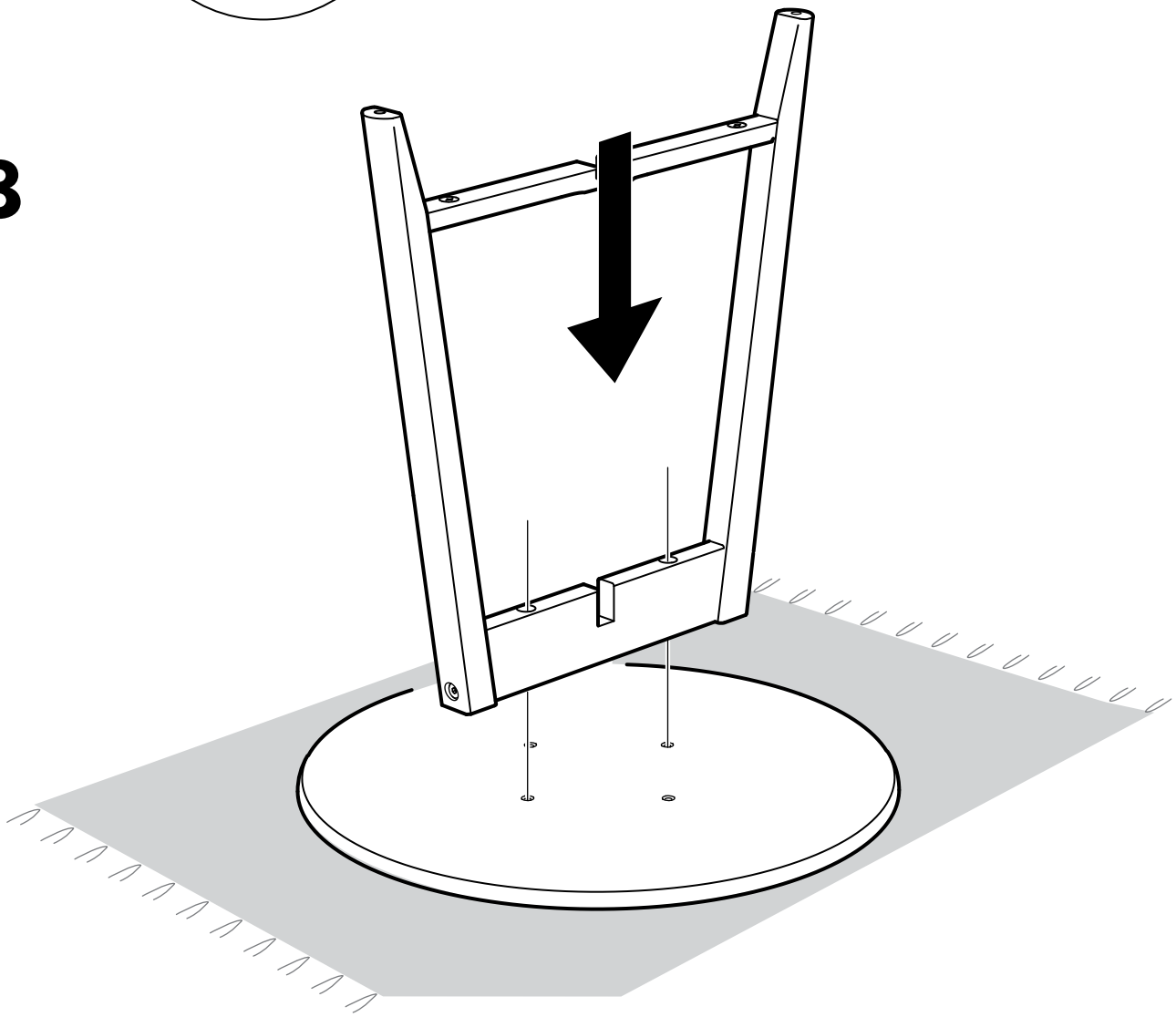

9

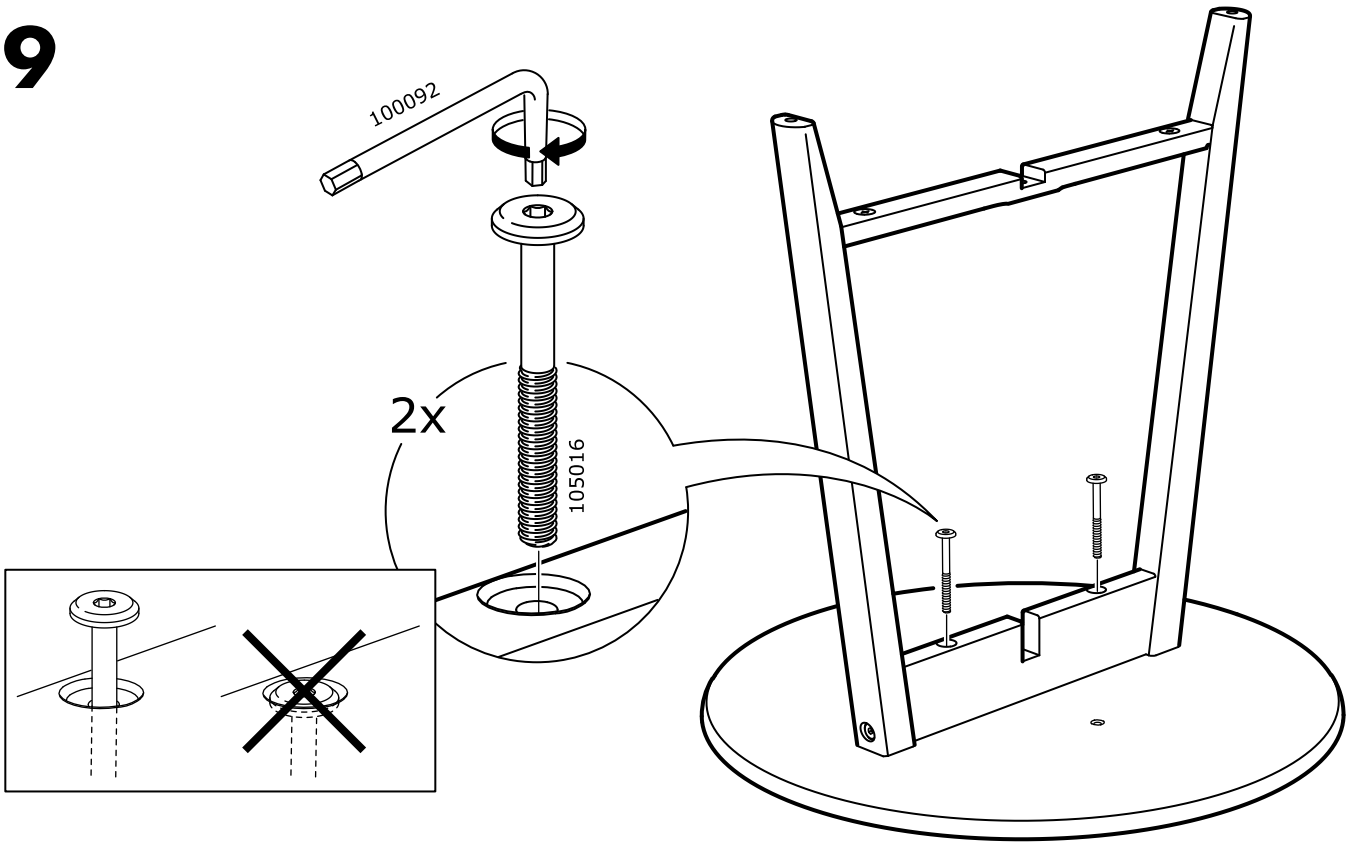

10

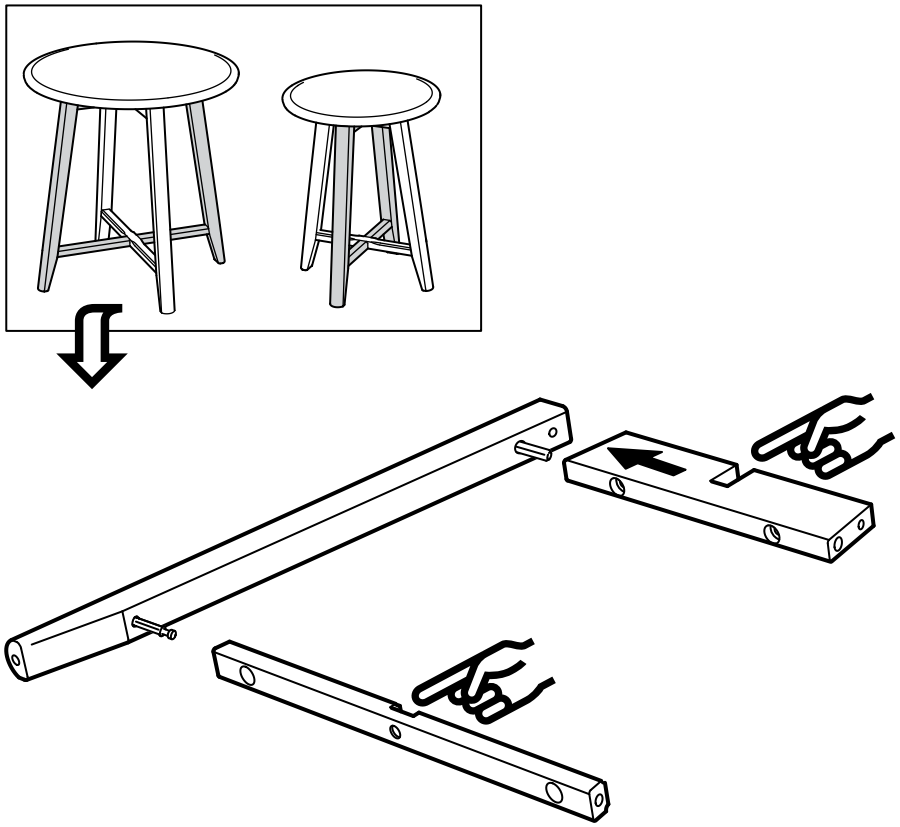

11

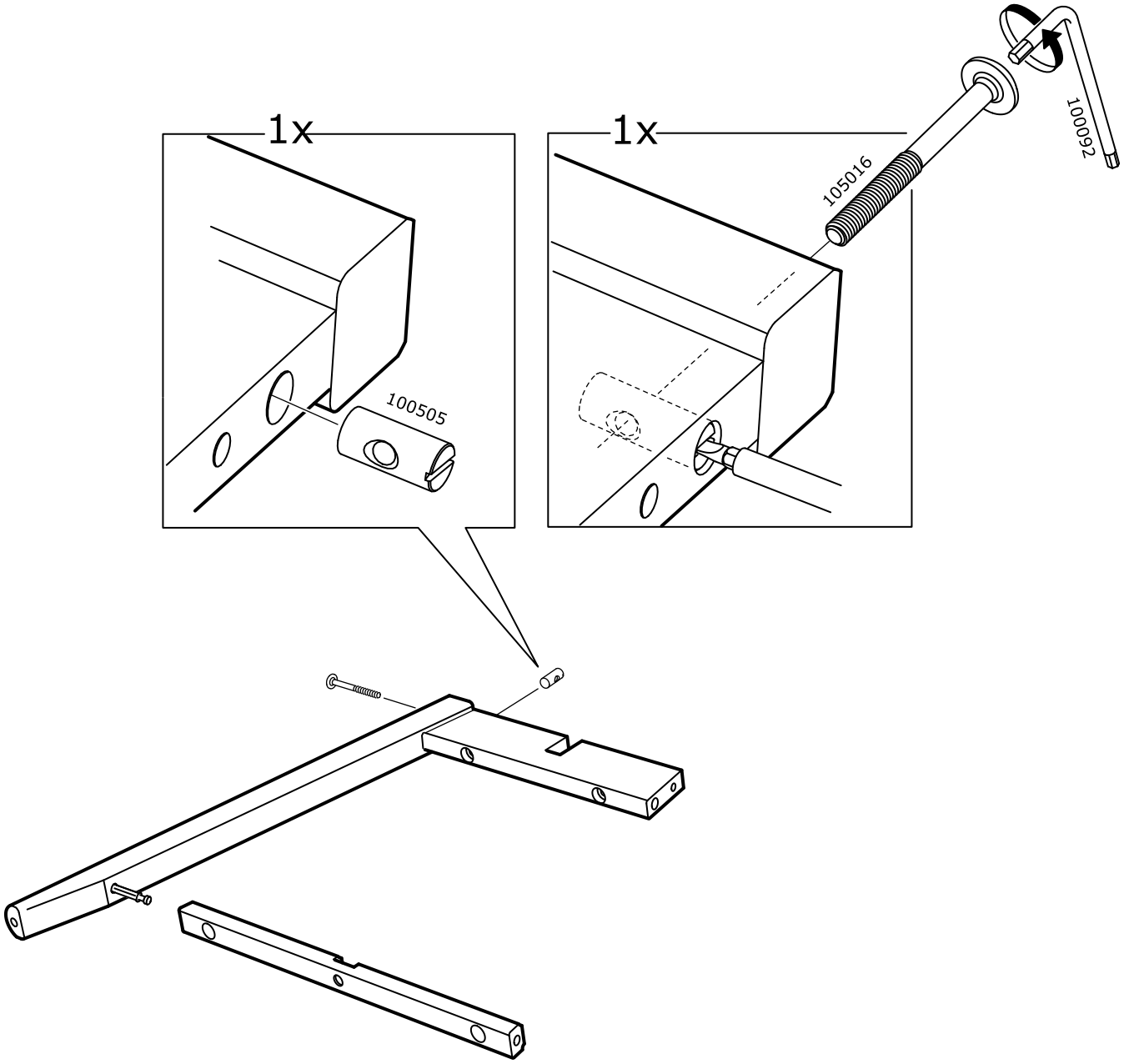

12

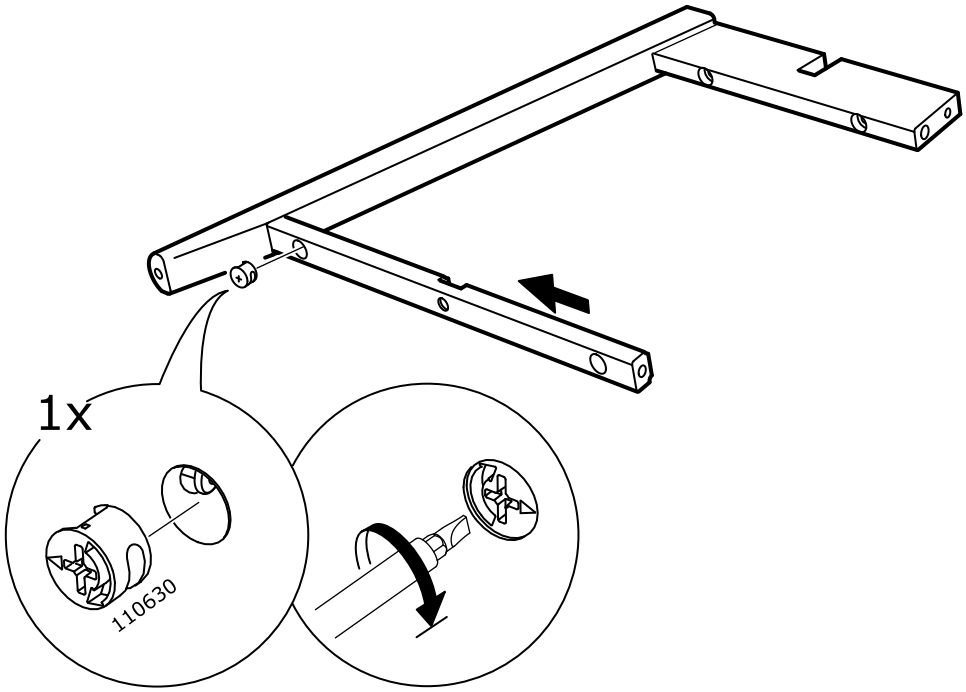

13

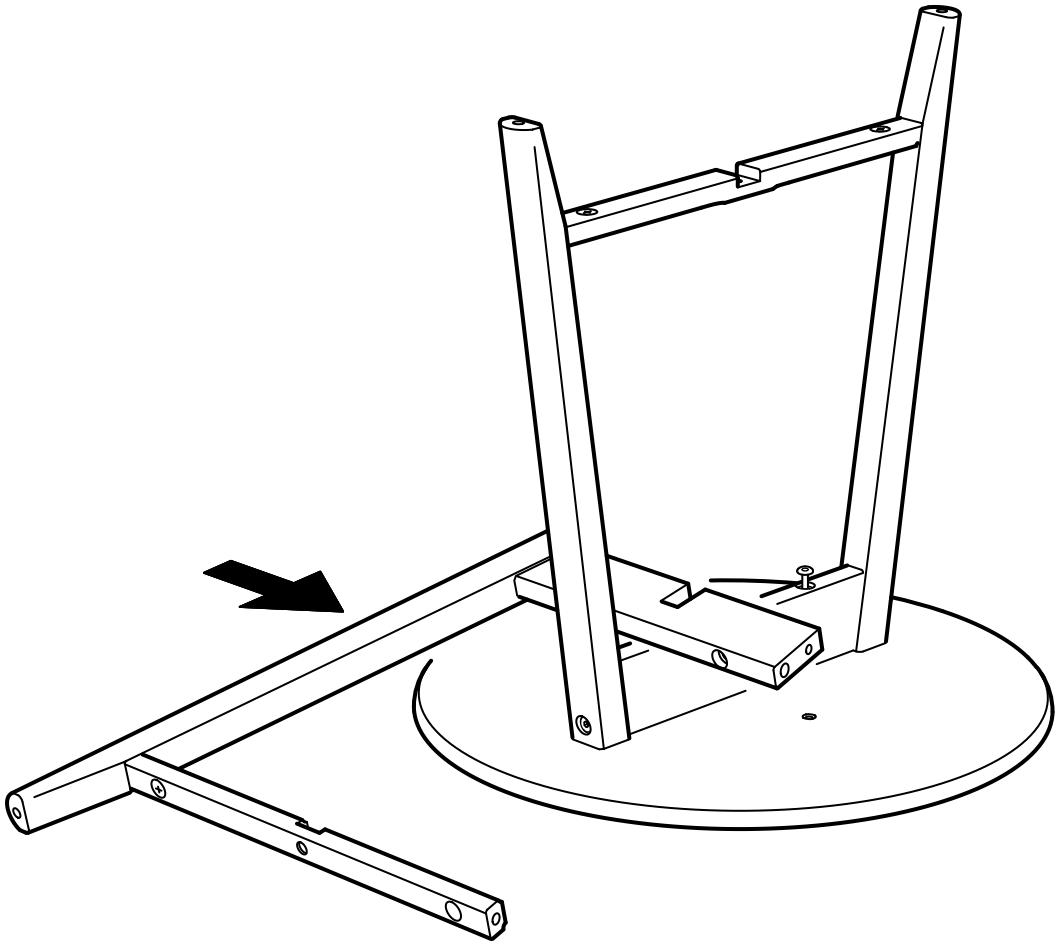

14

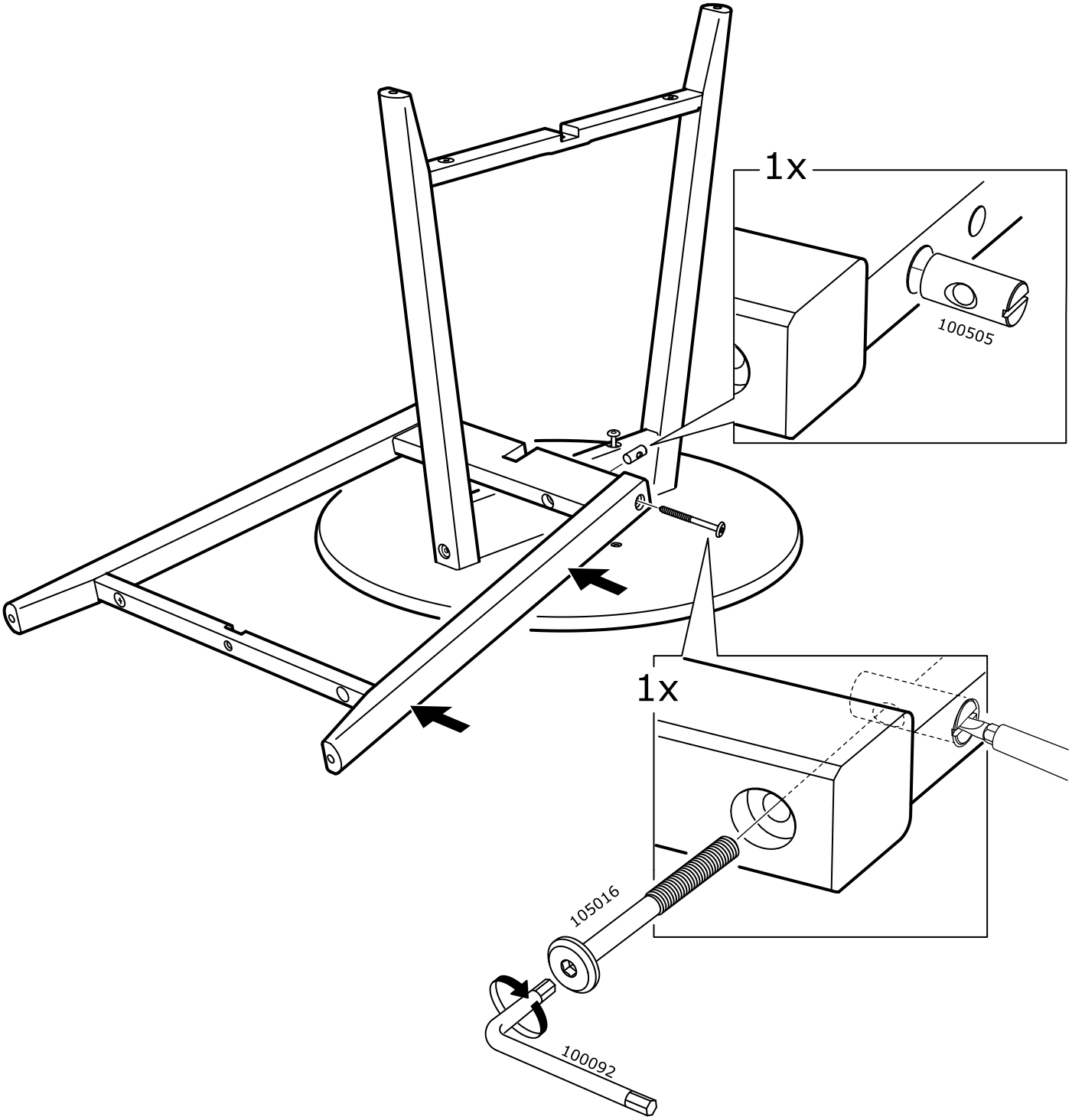

15

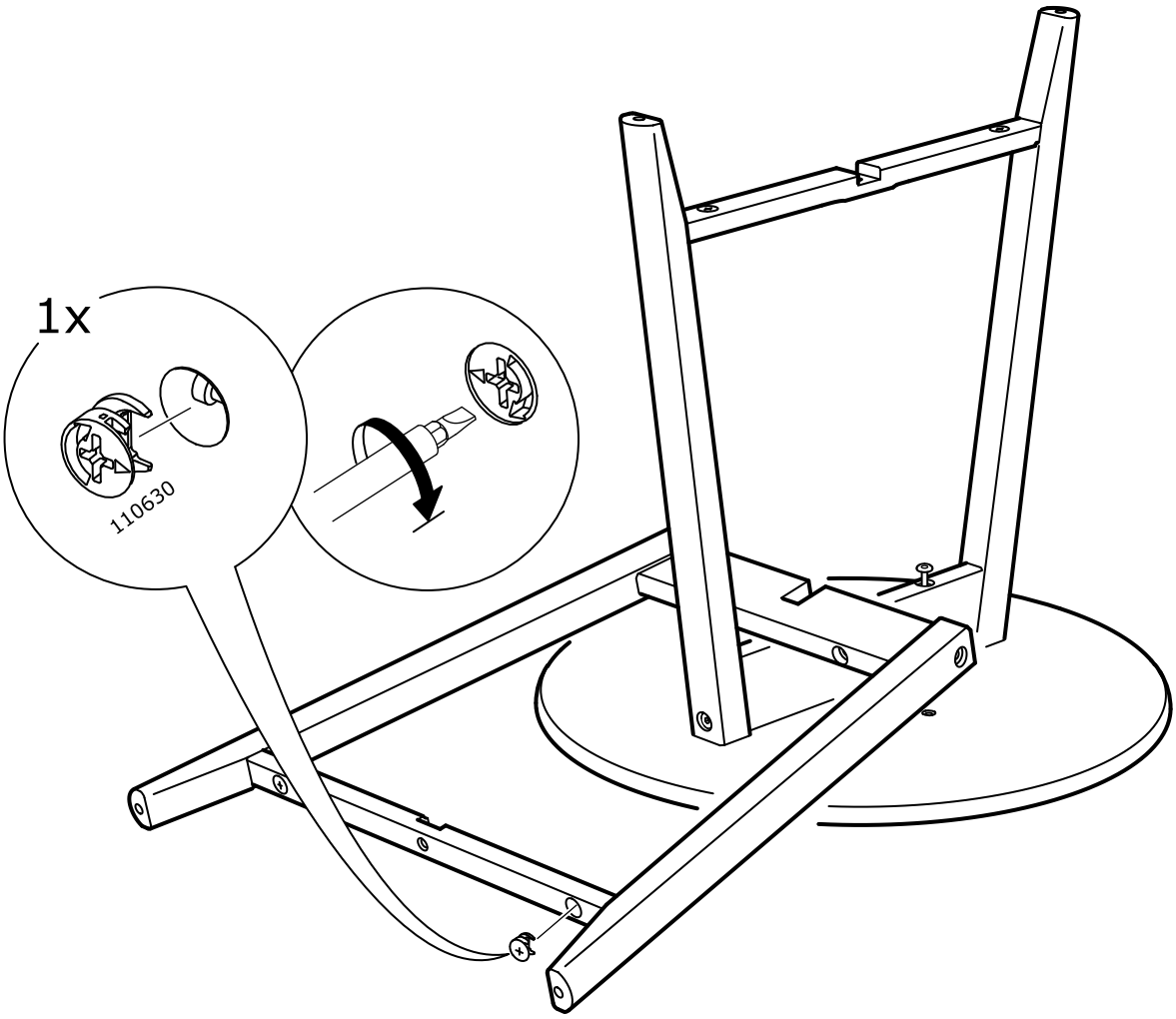

16

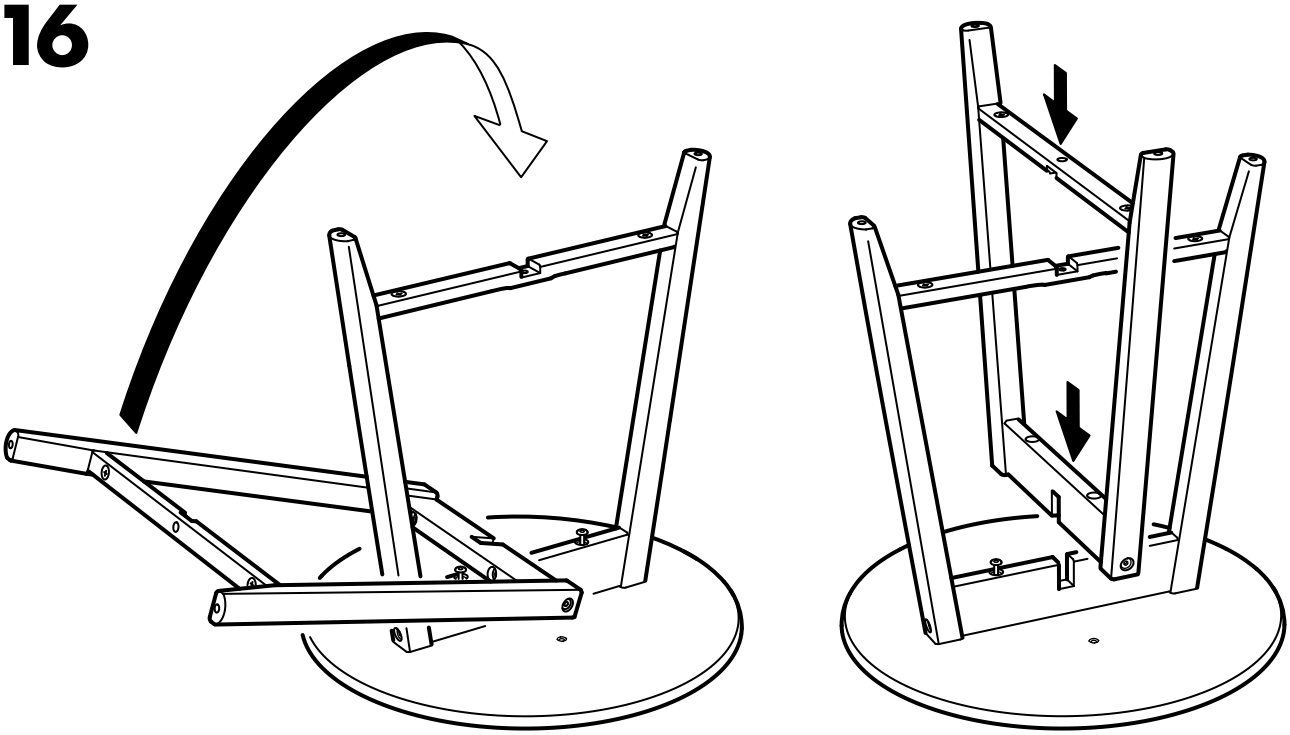

17

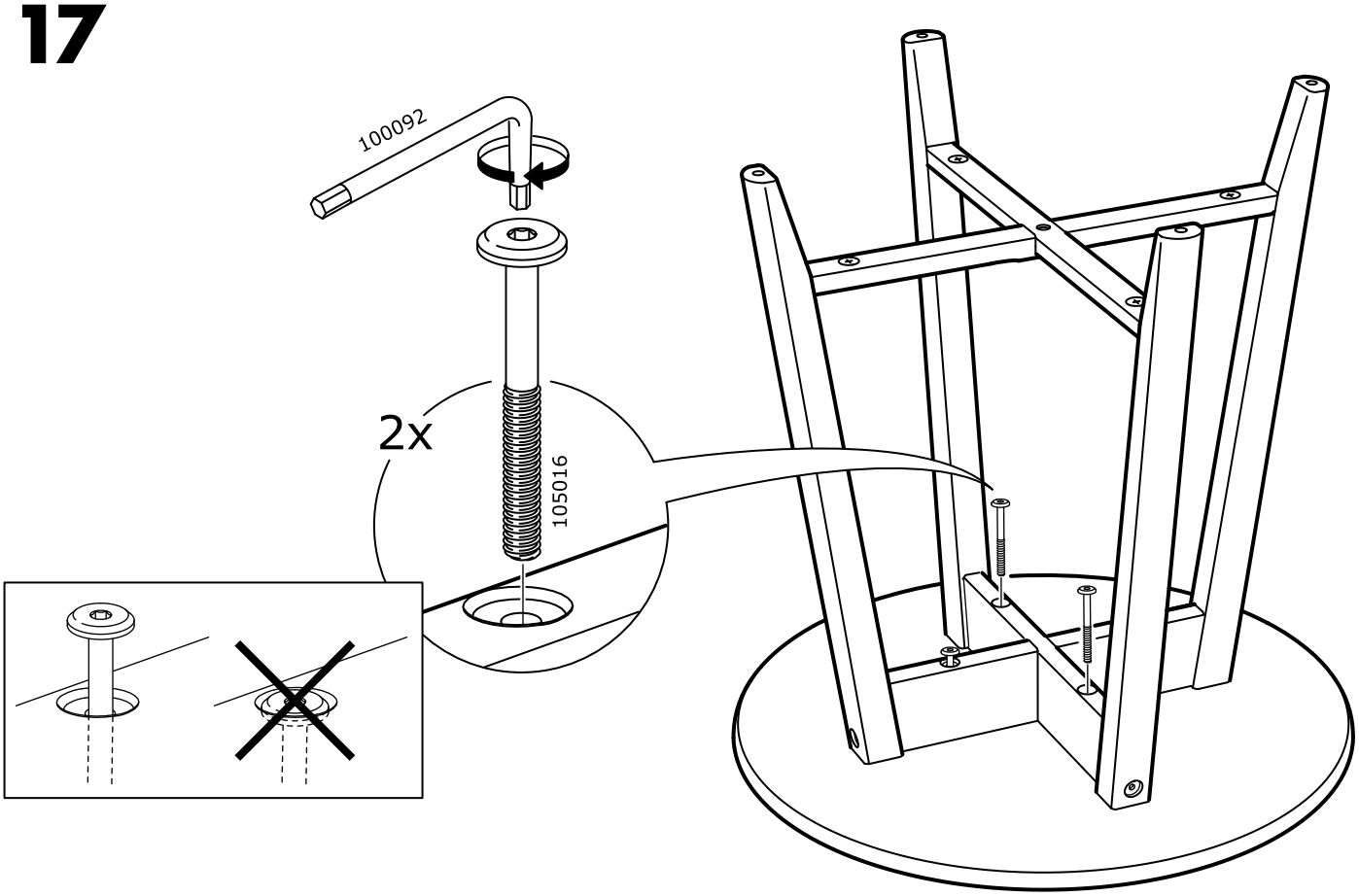

18

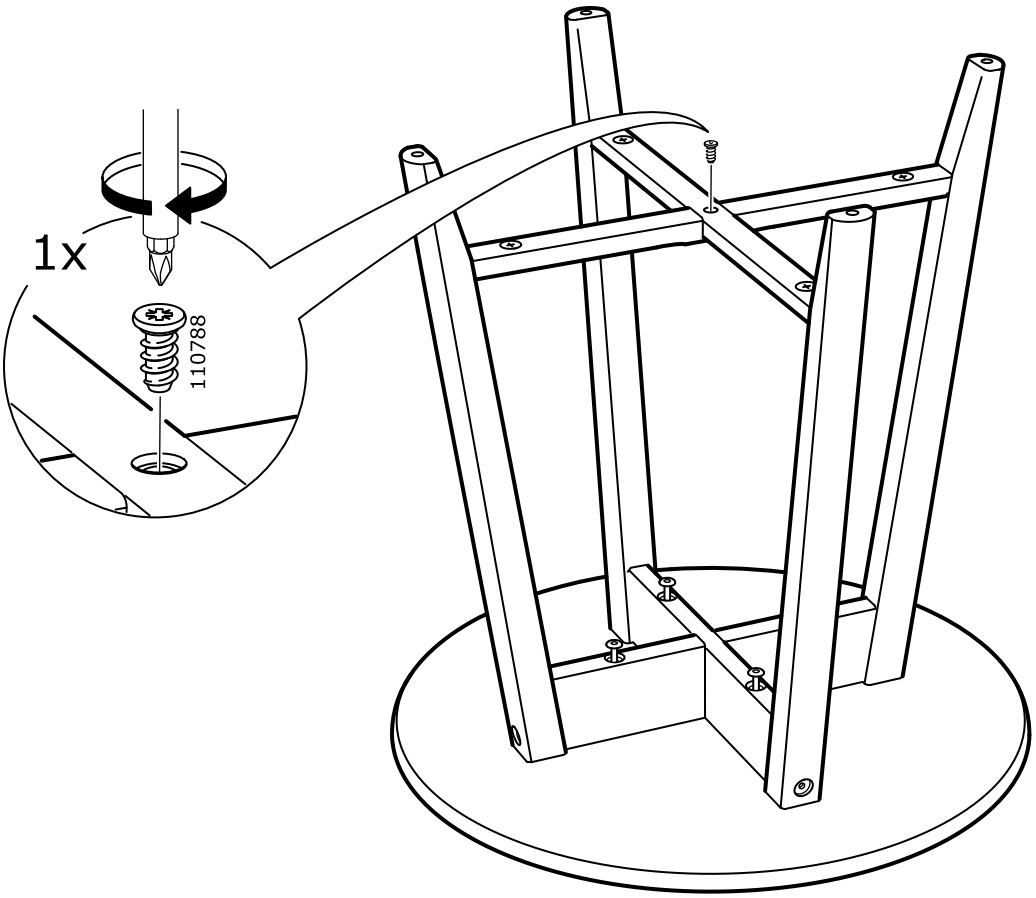

19

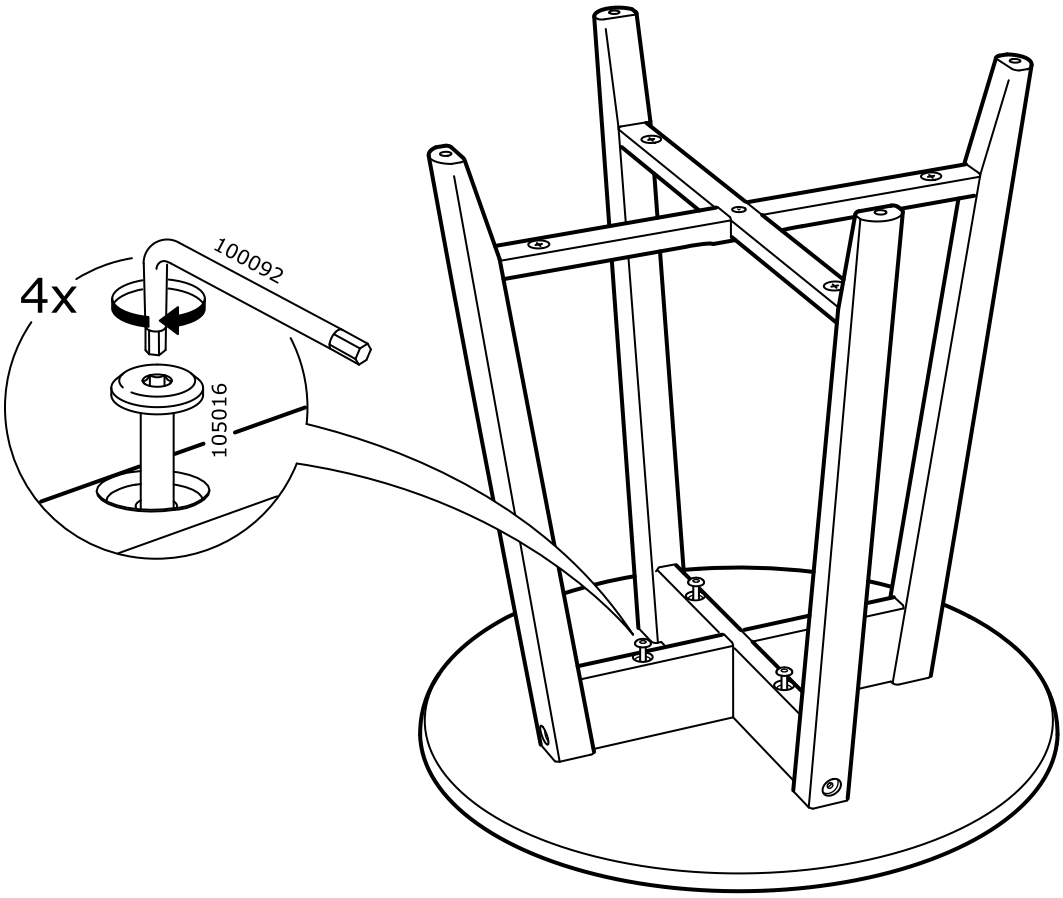

20

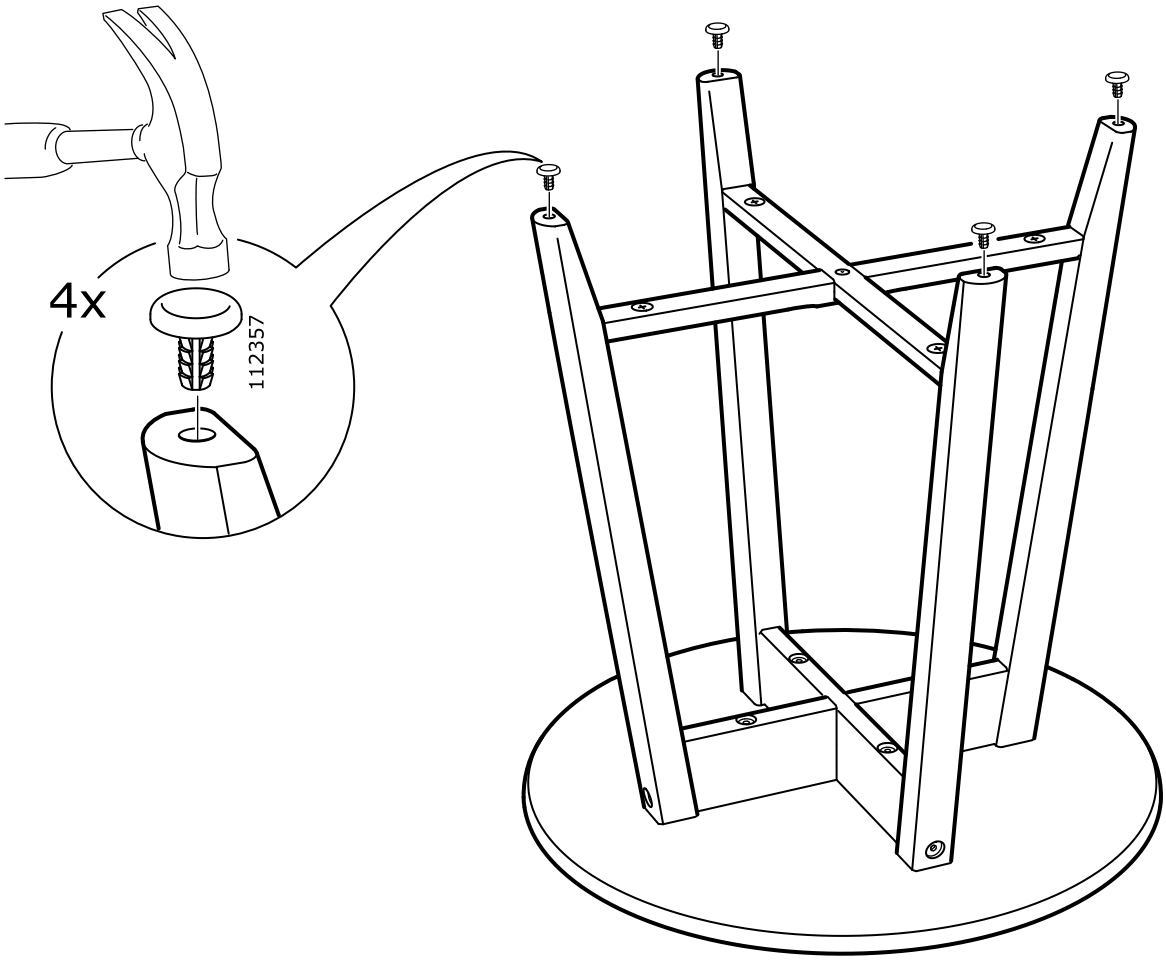

© Inter IKEA Systems B.V. 2014